菱和
RYOWO™

FRP COUNTER FLOW FT SERIES

COOLING TOWER

STRUCTURE

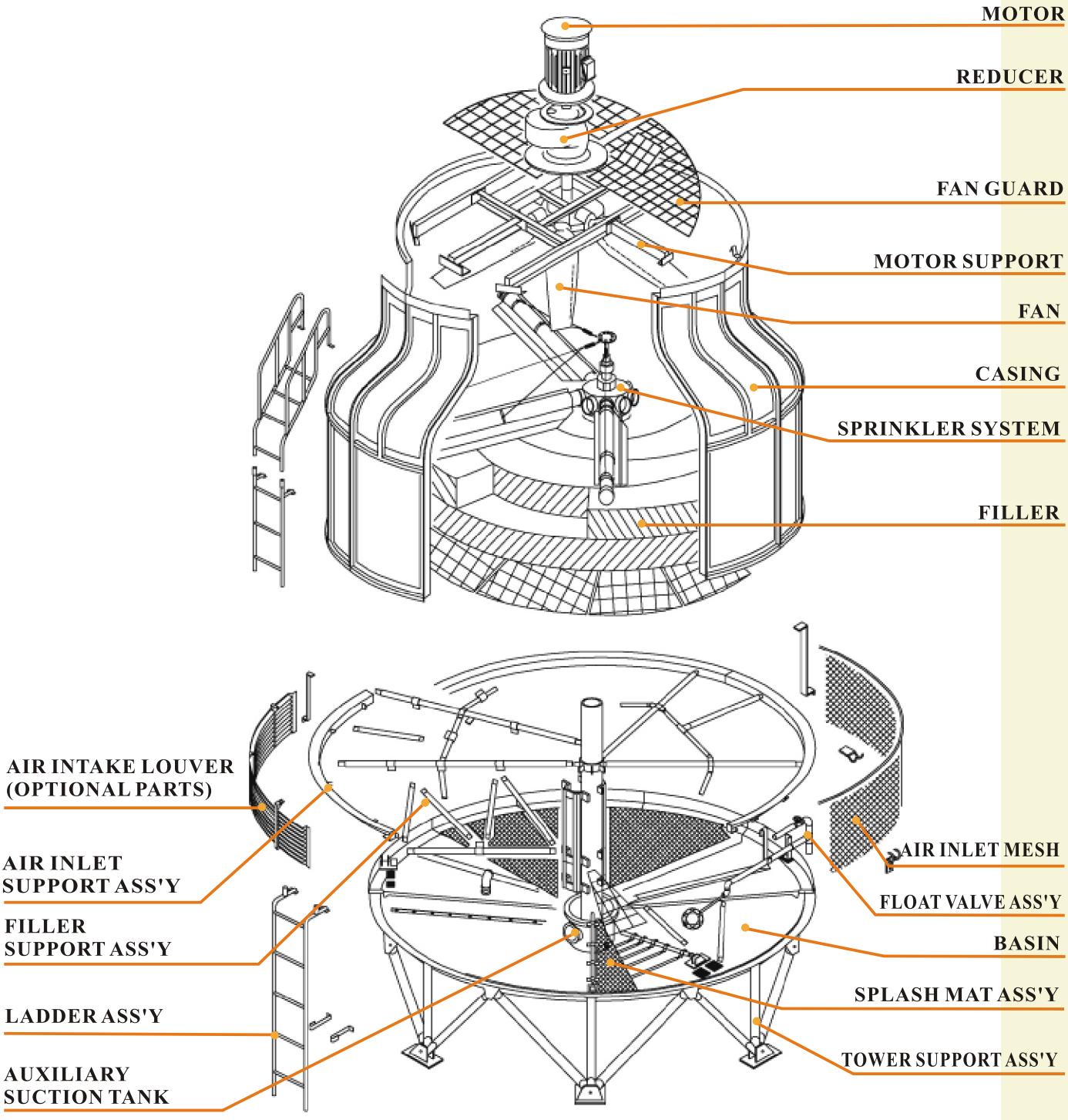

PRINCIPLE OF OPERATION

Hot water is distributed over the filler through the low velocity automatic sprinkler system and is mixed with the upward draft of ambient air causing evaporation and thus heat is removed from the water. The cooled water falls into the basin and is pumped to the heat sources for recirculation.

COMPONENT FUNCTION & FEATURE

AXIAL FAN

All fans are induced-draft axial type with adjustable pitch. Material chosen are non-corrosion of plastic, FRP or alu-minium alloy. The high efficiency design ensures low running cost and the lowest possible noise level . Fan blade pitches is factory set and balanced.

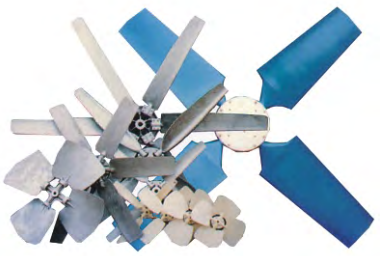

MOTOR

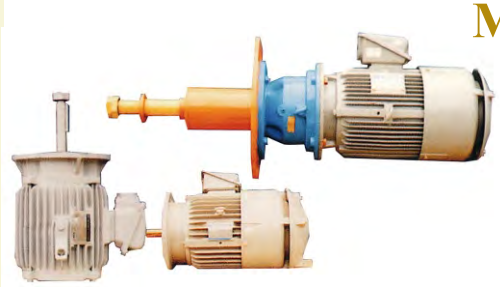

The motors, totally enclosed, fan cooled flange type, 380V/ 3ph/ 50 Hz, induction weather proof, are specially designed for RYOWO. Motors from 5.5 kw and up are Y- start and below are direct-on-line start.

TRANSMISSION SYSTEM

The fans of small models are designed to be driven by low speed motor of 6,8,10 or 12 poles which can minimise the numbers of transmission parts used. For large models, the fans are vee-belt or gear driven with 4 poles motors so the speed of fans can be adjustable to suit various application.

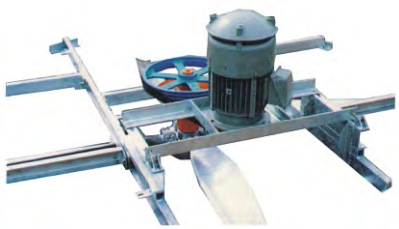

SPRINKLER SYSTEM

Automatic rotary sprinkler system with rotary head and sprinkler pipe distributes the hot water over the entire face area of the filler. Sprinkler pipes are non-clogging, require low-pressure to operate, and assures uniform water flow with minimal operating pump head. The F.R.P. eliminators attached to sprinkler pipes are specifically designed for Low pre Ssure drop and minimises the drift loss of water.

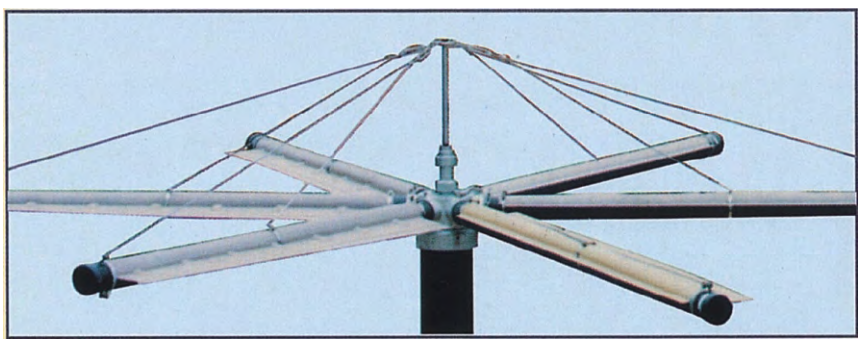

COMPONENT FUNCTION & FEATURE

CASING & BASIN

F.R.P. (fibreglass reinforced polyester) formed casings are durable, non-corrosive, weather-proof, and light weight. Cylindrical form is shaped to fully withstand wind pressure, vibration and such F.R.P. casings obliviate need for painting, reduce maintenance costs and guarantee long dependable service.

Bowl-shape basins are also made from F.R.P. with built in socket or flanged outlets for piping connections. For large models, a F.R.P. aux. suction tank is employed and fitted with piping flanges or sockets.

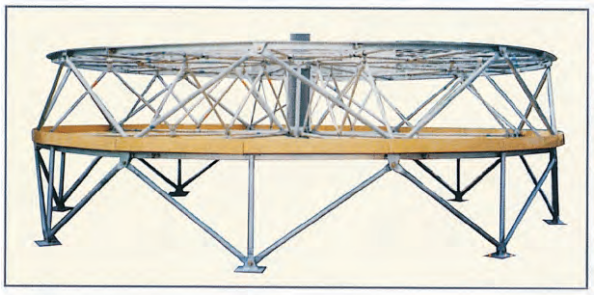

STEEL STRUCTURE

All supporting steel members are hot-dip galvanized to minimise rusting and corrosion ensuring long service life even in corrosive atmosphere. The stainless hardware members are also available upon request.

FILLER

High performance RYOWO V-30 film filler is the heart of the tower. The specially formed PVC sheets maximize the air/water contact area and minimise air pressure drop to assure efficient heat transfer while keeping fan power requirement low. It is virtually immune to corrosion and decay.

Eliminator

Specially made drift eliminator consisted of 2 types of sheets forms a “v” shape path for the transmission of the cooling tower discharge air stream. The small water droplets in the stream impact the surfaces of the drift eliminator sheets and are separated from the stream such that the drift loss ratio maintain at less than 0.001% of circulating water flow rate.

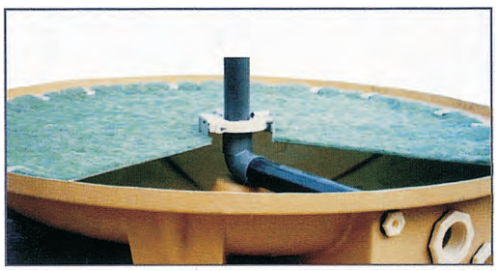

SPLASH MAT (LOW NOISE MODELS)

Specially designed noise absorbing splash mat is provided for low noise models on the water basin to minimise the unpleasant water dripping noise in the basin.

SPECIFICATION FOR FT SERIES

SPECIFICATION FOR FT SERIES

ITEM	MODEL			FT-8	FT-10	FT-15	FT-20	FT-25	FT-30	FT-40	FT-50	FT-60	FT-80	FT-100	FT-125	FT-150	FT-175	FT-200	FT-225	FT-250	FT-300	FT-350	FT-400	FT-500	FT-600	FT-700	FT-800	FT-1000
Capacity	27 ºC WB	Circulating water flow rate	m^3/ hr	6.2	7.8	11.7	15.6	19.5	23.4	31.2	39.1	46.9	62.5	78.1	97.7	117.2	136.7	156.2	175.8	195.3	234.4	273.4	312.5	390.6	468.7	546.8	625.0	781.2
		Make-up water (Approx.)	m^3/ hr	0.1	0.1	0.2	0.2	0.3	0.3	0.4	0.6	0.7	0.9	1.1	1.4	1.7	2.0	2.2	2.5	2.8	3.4	3.9	4.5	5.6	6.7	7.8	8.9	11.2
	28 ºC WB	Circulating water flow rate	m^3/ hr	5.6	7.4	10.6	14.4	17.8	21.5	28.7	36.3	42.5	58.8	70.6	88.2	107.5	125.0	142.5	160.0	176.2	212.5	250.0	287.5	337.5	431.2	512.4	575.0	718.7
		Make-up water (Approx.)	m^3/ hr	0.1	0.1	0.2	0.2	0.3	0.3	0.4	0.5	0.6	0.8	1.0	1.3	1.5	1.8	2.0	2.3	2.5	3.0	3.6	4.1	4.8	6.2	7.3	8.2	10.3
	Air flow rate (Approx.)		m^3/ min	70	85	140	160	230	280	330	420	450	700	830	950	1150	1200	1250	1600	1750	2000	2200	2450	2700	3500	3750	5000	5400
	Hot water temperature		ºC	37																								
	Cold water temperature		ºC	32																								
Overall Dimension	Diameter (ϕ)		mm	920	920	1160	1160	1490	1660	1660	1890	2100	2100	2900	2900	2900	3310	3310	3960	3960	4360	4760	4760	5600	6600	6600	7600	7600
	Height (H)		mm	1560	1700	1585	1835	1945	1885	2035	2110	2300	2475	2910	3110	3110	3300	3450	3920	3920	3990	4195	4255	4590	5310	5510	5660	5860
	Height (w/o motor) (m)		mm	1390	1530	1395	1645	1760	1720	1785	1860	1980	2155	2590	2790	2790	2880	3030	3300	3300	3290	3495	3495	3830	4470	4670	4720	4940
Material	Air inlet mesh			PVC																								
	Basin			FRP																								
	Casing			FRP																								
	Eliminator			FRP																								
	Fan			ABS Plastic								FRP					Aluminium alloy								FRP			
	Filler			PVC																								
	Motor support			Steel (Hot-dip galvanized)																								
	Sprinkler head			ABS Plastic											Aluminium alloy													
	Sprinkler pipe			PVC pipe																								
	Stand pipe			PVC pipe																								
	Structure			Steel (Hot-dip galvanized)																								
Fan	TYPE			Axial-flow																								
	Diameter		mm	550	640		770			930		1200		1500			1800		2400			3000		3400		3700		
	Speed		rpm	970								750					600		450			375		314				
	Driven type			Direct driven															Belt driven					Gear driven				
Motor	TYPE			Totally enclosed fan cooled outdoor 3 phase induction motor																								
	Power source			380V / 3 / 50Hz																								
	Rated output		kw	0.18		0.37		0.75		1.5				2.2			3.7		5.5		7.5		11		15		22	
	No of pole		Pole	6								8					10		4									
Distribution System	TYPE			Automatic sprinkler system																								
	Inlet dia		mm	40		50		80			100		125		150		200						250			300		
	Outlet dia			15		20		40					65				75					100	75			100		
	No of outlet			4							6		4				6						8			10		
Piping	Inlet		mm	40		50		80			100		125		150		200						250			300		
	Outlet		mm	40		50		80			100		125		150		200						250			300		
	Drain		mm	25									50				80						100					
	Overflow		mm	25									50				80						100					
	Float valve		mm	15								20			25		32						50			80		
	Manual make-up		mm	15									20		25		32						50			80		
Weight	Dry weight		Kg	56	65	75	85	105	130	150	180	250	270	500	540	580	870	900	1300	1350	1550	1720	2050	2450	3950	4050	4700	4900
	Operating weight		Kg	140	150	200	210	290	370	390	550	840	860	1600	1640	1680	2170	2200	2700	2750	3350	3720	3950	6150	9350	9450	11900	12100
Noise Level	Sound pressure level		dBA	45.5	47	48	50	52	54	58	59	58	59	61	61.5	62	62	62	63	63	64	64.5	61.5	62	65	66	73	74

NOTE : Nominal cooling capacity is based on 13 ℓ / min / RT (1 RT=3,900 Kcal / hr) at 37ºC inlet water tpmperature, 32ºC outlet water temperature and 27ºC ambient wet bulb temperature.

The SPLs are measured 16m horizontally from the edge of the tower at 1.5m above the foundation level.

Pump head is obtained by adding resistance of piping/condenser and the tower height(H).

The unit dimension in this catalogue is metric. Specifications listed in this catalogue are subject to change without further noticefor technical improvement of our products.

FT OR FT/LN SERIES QUICK SELECTION TABLE

(20°CWB~30°CWB)

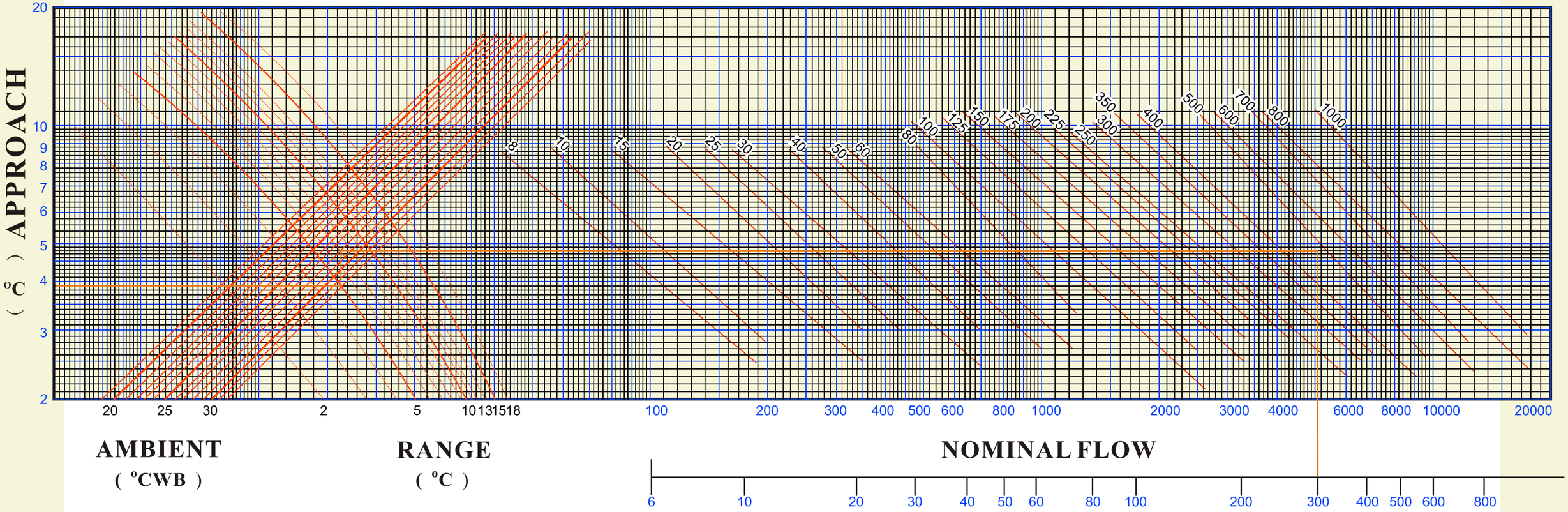

EXAMPLE:

RATE :300m³/hr

INLET WATER TEMP :37°C

OUTLET WATER TEMP :32°C

WET BULB TEMP :28°C

RANGE: INLET WATER TEMP-OUTLET WATER TEMP
: 37°C - 32°C = 5°C

APPROACH: OUTLET WATER TEMP-WET BULB TEMP
: 37°C - 32°C = 5°C

TOWER SELECTED: FT - 500 OR FT/LN - 500

COOLING TOWER	CT							
NOMINAL FLOW	m³/hr							
INLET WATER	HWT°C							
OUTLET WATER	CWT°C							
AMBIENT WB	WB°C							
RANGE	(HWT-CWT)°C							
APPROACH	(CWT-WB)°C							
MODEL								

SPECIFICATION FOR FT/LN(LOW NOISE TYPE)

SPECIFICATION FOR FT/LN(LOW NOISE TYPE)

ITEM	MODEL			FT/LN 8	FT/LN 10	FT/LN 15	FT/LN 20	FT/LN 25	FT/LN 30	FT/LN 40	FT/LN 50	FT/LN 60	FT/LN 80	FT/LN 100	FT/LN 125	FT/LN 150	FT/LN 175	FT/LN 200	FT/LN 225	FT/LN 250	FT/LN 300	FT/LN 350	FT/LN 400	FT/LN 500	FT/LN 600	FT/LN 700	FT/LN 800	FT/LN 1000
Capacity	27 ºC WB	Circulating water flow rate	m^3/ hr	6.2	7.8	11.7	15.6	19.5	23.4	31.2	39.1	46.9	62.5	78.1	97.7	117.2	136.7	156.2	175.8	195.3	234.4	273.4	312.5	390.6	468.7	546.8	625.0	781.2
		Make-up water (Approx.)	m^3/ hr	0.1	0.1	0.2	0.2	0.3	0.3	0.4	0.6	0.7	0.9	1.1	1.4	1.7	2.0	2.2	2.5	2.8	3.4	3.9	4.5	5.6	6.7	7.8	8.9	11.2
	28 ºC WB	Circulating water flow rate	m^3/ hr	5.6	7.1	10.6	14.4	17.8	21.5	28.7	36.3	42.5	58.8	70.6	88.2	107.5	125.0	142.5	160.0	176.2	212.5	250.0	287.5	337.5	431.2	512.4	575.0	718.7
		Make-up water (Approx.)	m^3/ hr	0.1	0.1	0.2	0.2	0.3	0.3	0.4	0.5	0.6	0.8	1.0	1.3	1.5	1.8	2.0	2.3	2.5	3.0	3.6	4.1	4.8	6.2	7.3	8.2	10.3
	Air flow rate (Approx.)		m^3/ min	70	85	140	160	230	280	330	420	450	700	830	950	1150	1200	1250	1600	1750	2000	2200	2450	2700	3500	3750	5000	5400
	Hot water temperature		ºC	37																								
	Cold water temperature		ºC	32																								
Overall Dimension	Diameter		mm	920	1160	1160	1490	1660	1660	1890	1890	2100	2100	2900	2900	2900	3310	3310	3960	3960	4360	4760	4760	5600	6600	6600	7600	7600
	Height （H）		mm	1755	1620	1870	1945	1885	2145	2220	2220	2340	2515	3060	3260	3260	3450	3600	3920	3920	3990	4195	4255	4590	5310	5510	5660	5860
	Height (w/o motor) (m)		mm	1530	1395	1645	1760	1720	1785	1860	1860	1980	2155	2590	2790	2790	2880	3030	3300	3300	3290	3495	3495	3830	4470	4670	4720	4940
Material	Air inlet mesh			PVC																								
	Basin			FRP																								
	Casing			FRP																								
	Eliminator			FRP																								
	Fan			ABS Plastic								Aluminium alloy													FRP			
	Filler			PVC																								
	Motor support			Steel (Hot-dip galvanized)																								
	Sprinkler head			ABS Plastic										Aluminium alloy														
	Sprinkler pipe			PVC pipe																								
	Stand pipe			PVC pipe																								
	Structure			Steel (Hot-dip galvanized)																								
	Splash mat			Nylon																								
Fan	TYPE			Axial-flow																								
	Diameter		mm	640		770			930			1200		1500			1800		2400			3000		3400		3700		
	Speed		rpm	750					600			500		440			375					314		257				
	Driven type			Direct driven										Belt driven										Gear driven				
Motor	TYPE			Totally enclosed fan cooled outdoor 3 phase induction motor																								
	Power source			380V / 3 / 50Hz																								
	Rated output		kw	0.2		0.37			1.1			1.5		3.7				5.5		7.5		11		15		22		
	No of pole		Pole	8					10			12		4														
Distribution System	TYPE			Automatic sprinkler system																								
	Inlet dia		mm	40	50			80				100		125		150			200				250			300		
	Outlet dia			15	20			40						65					75				100	75		100		
	No of outlet			4								6		4					6					8		10		
Piping	Inlet		mm	40	50			80				100		125		150			200				250			300		
	Outlet		mm	40	50			80				100		125		150			200				250			300		
	Drain		mm	25										50					80				100					
	Overflow		mm	25										50					80				100					
	Float valve		mm	15								20					25		32				50			80		
	Manual make-up		mm	15										20			25		32				50			80		
Weight	Dry weight		Kg	80	85	100	125	145	240	280	290	380	400	600	640	680	970	1000	1400	1450	1700	1920	2250	2650	4250	4350	5100	5300
	Operating weight		Kg	160	205	220	290	375	470	625	635	970	990	1700	1740	1780	2270	2300	2800	2850	3500	3920	4250	6350	9650	9750	12300	12500
Noise Level	Sound pressure level		dBA	40	41	42.5	43.5	44.5	46	47	48	48	49.5	52	52.5	53	54	54.5	55	55	56	57	58	60	62	62.5	65	66

GUARANTEE:

All components are guaranteed against defective material for a period of one (1) year.

When return to RYOWO with transportation prepaid , all parts found by factory inspection to be defective will be repaired replaced without charge , FOB HONG KONG.

No liability will be assumed for loss or damage resulting from misuse of products.

APPLICATION

For inquiry on RYOWO cooling towers , please contact local agents and specify the following conditions:

a). Circulating water flow
b). Inlet water temperature
c). outlet water temperature
d). ambient wet bulb temperature
e). power sources-voltage & frequency

TOWER FOUNDATION

FT-8 10 FT/LN-8 FT-15·20 FT/LN-10 15 FT-25 FT/LN-20 FT-30 40 FT/LN-25 30

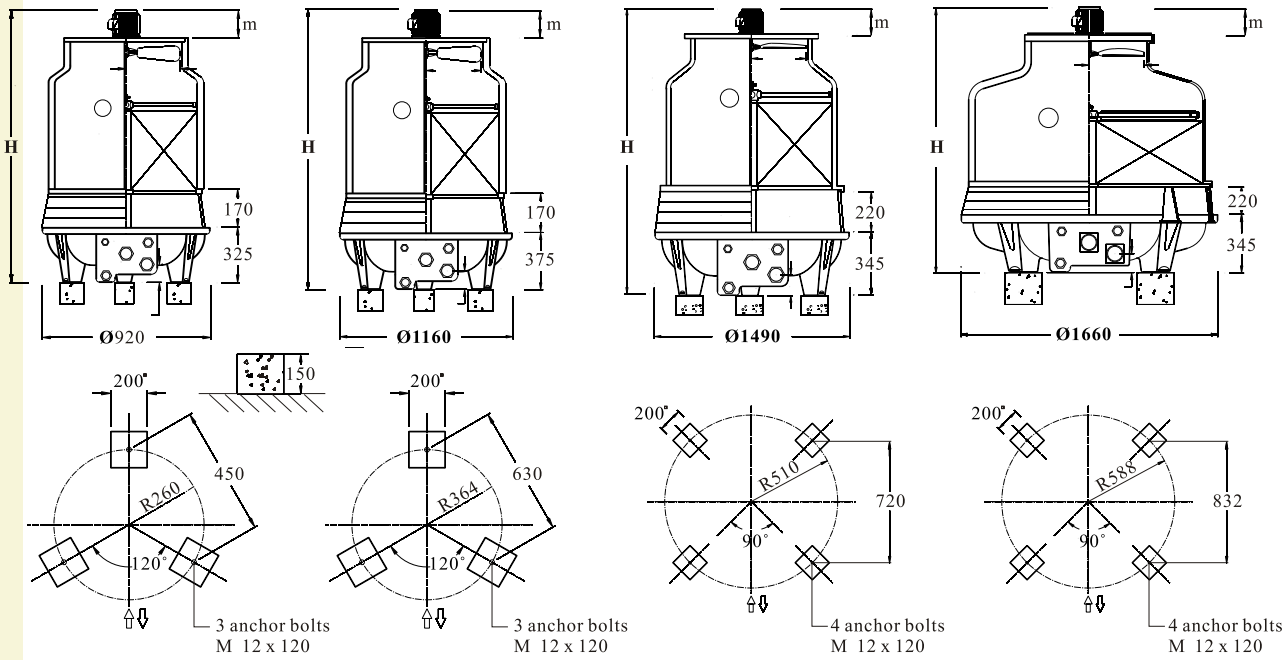

FT-50 FT/LN-40·50 FT· FT/LN-60·80 FT· FT/LN-100· 125·150

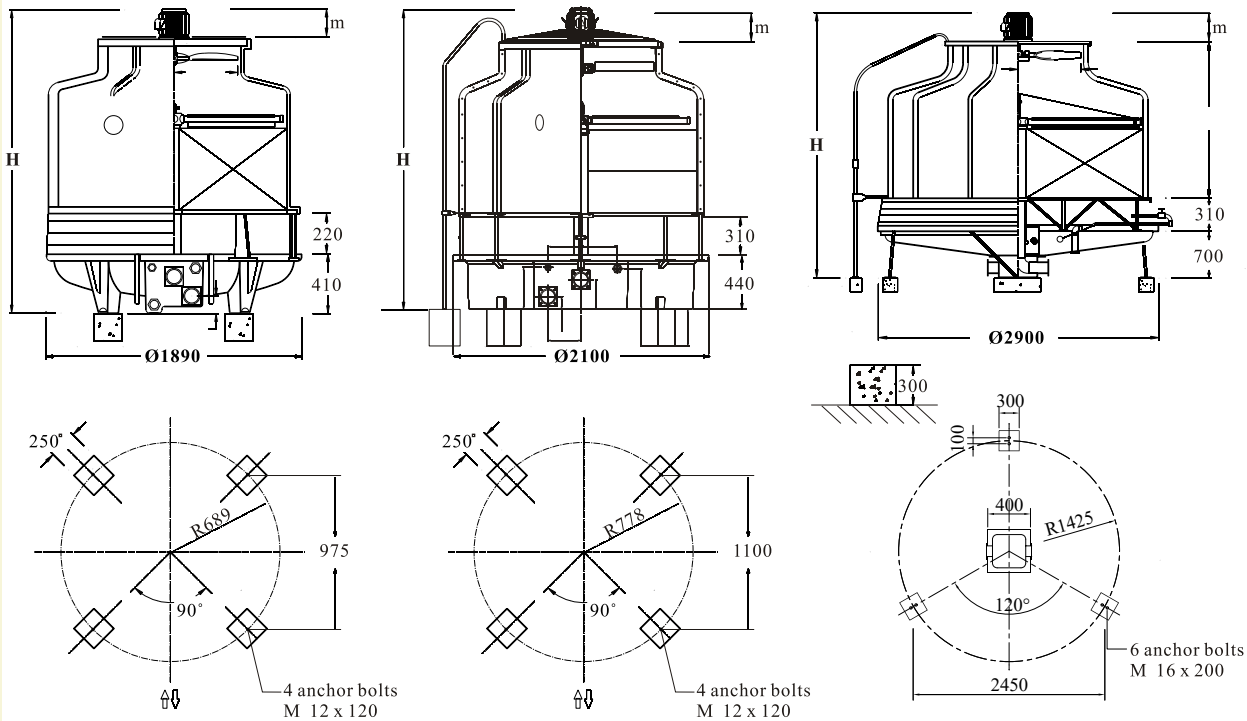

TOWER FOUNDATION

FT· FT/LN-175· 200

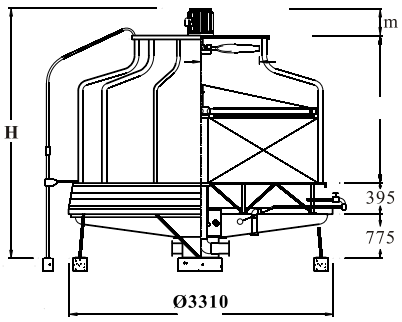

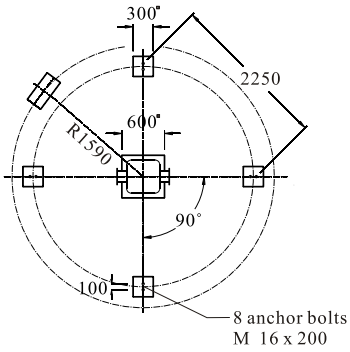

FT· FT/LN-225·250

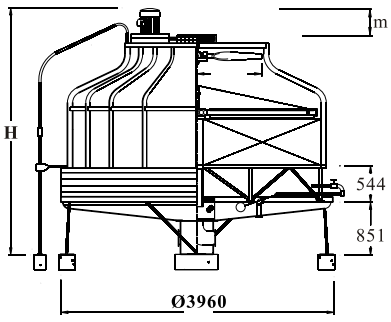

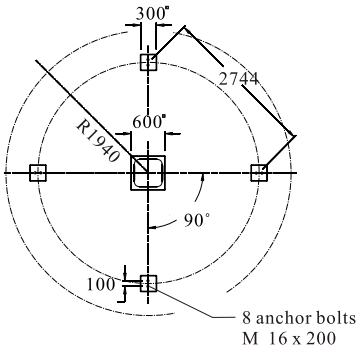

FT· FT/LN-(300) ·350·400

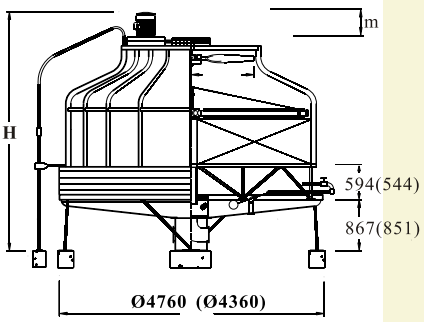

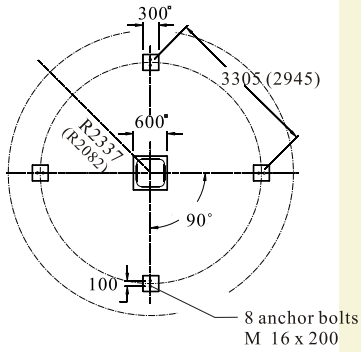

FT· FT/LN- 500

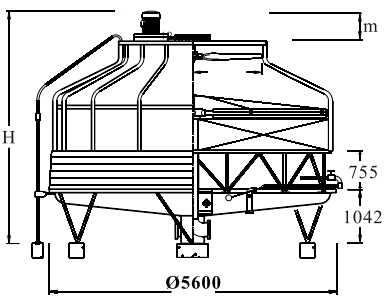

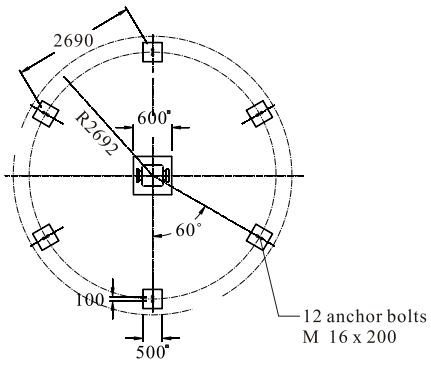

FT· FT/LN-600 · 700

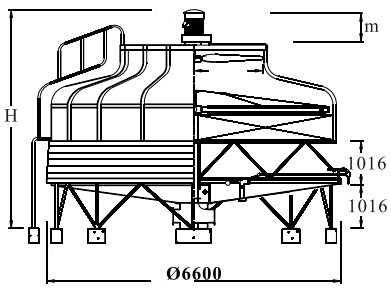

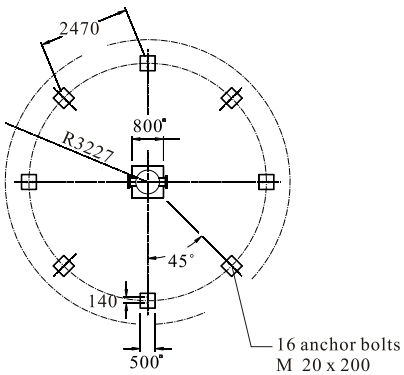

FT· FT/LN-800 · 1000

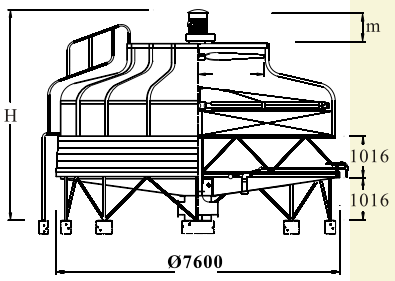

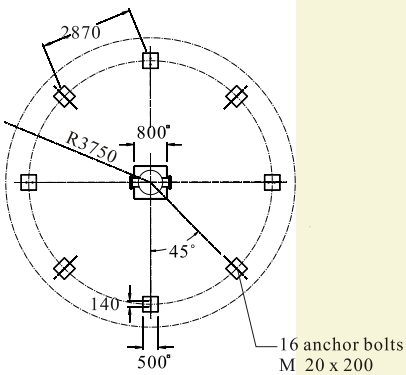

AVAILABLE OPTIONAL ACCESSORIES

DISCHARGE HOOD

This option is available on small models. It provides another direction of discharge air leaving the tower. It is made of F.R.P. with services door and wiring mesh on the air outlet.

HIGH TEMPERATURE FILLER

For high temperature operation such as waste water treatment , P.P. filler can withstand up to 80℃inlet water. (Special arrangement should be made for other components, please contact us for details.)

STAINLESS STEEL COMPONENTS

As an option, we can provide type 304 stainless steel major steel members, bolts and nuts.

TWO-SPEED MOTOR

As an option, two-speed motor can be provided in 4P/6P single winding configeration. A considerable reduction in noise and energy management can be achieved.

F.R.P. AIR INLET LOUVER

Inlet louver constructed of F.R.P. material can be provided, which matches the rest of tower and prevents water splashing out from the tower.

BASIN HEATERS

Electric immersion heaters with thermostat and control box are available to keep the basin water from freezing in sub-zero weather.

BODY COLOR

Cooling tower installed on the roof of building may be barely noticeable from the ground, and a colored cooling tower matching to building color will make it "good look".

JOB REFERENCES

FT-400 X 2
Bank of China, Shen Zhen

FT/LN-600 X 11
Hotel Lisboa, Macau

FT-1000 X 3
FT-500 X 10
CITIC Plaza, Guangzhou

FT/LN-300 X 6
Hong Kong University

FT-200 X 2
Miami University, U.S.A

RYOWO (HOLDING) CO .,LTD.

Room 1908, Nathan Road 700 Mong Kok,
Kowloon HongKong.

Tel : (852) 23918381
Fax: (852) 27893802

Http://www.ryowo.com
e-mail: ryinfo@ryowo.com

DONGGUAN RYOWO COOLING TOWER CO., LTD.

No.263 MeiJing Road West,Dalang,Dongguan,Guangdong,PRC

Tel : (86)-769 89399698
Fax: (86)-769 82973398

(86)-769 89399699
Postal Code: 523795

ryowo™

COOLING TOWER MANUFACTURER SINCE 1978

© 2013 RYOWO (Holding) Co.,Ltd.
All rights reserved.

BROCH -EN-(04)-2018